

WORKING DIAGRAM

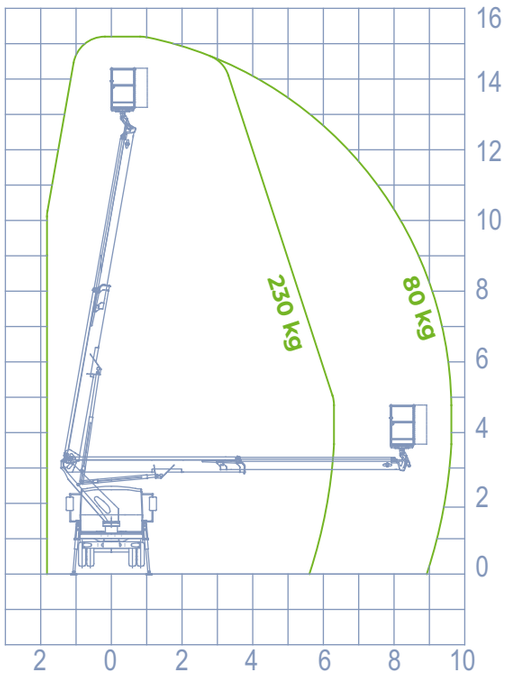

INFO

OUTRIGGERS
H+H

WORKING HEIGHT
15,20 m

BASKET HEIGHT
13,20 m

MAX OUTREACH
10,00 m

BASKET LOAD CAPACITY
230 kg

BASKET SIZE
1400x700x1100 mm

BASKET ROTATION
90° + 90°

CONTROLS
Electric

TURRET ROTATION
700°

GVW
3,5 ton

STANDARD ACCESSORIES

AUTOMATIC STABILIZATION

The **SPEED** function is a new solution present in Socage's Aerial Working Platforms on Chassis. It brings great advantages including increasing safety and facilitating the correct use of the necessary stabilization maneuver to start working. With a single button, even from the basket, it allows to obtain stabilization in a safe, simple and fast way, quickly overcoming the irregularities of the ground.

DATA SHEET

- Cables and hoses installed inside the boom
- **SPEED automatic closing**
- **SPEED automatic stabilization from the basket and from the ground**
- Proportional electro-hydraulic controls with regulation of the speed of all movements
- Electronic safe system CAN BUS
- 4 outrigger plates
- Socket 230V and 12V in the basket
- Possibility of simultaneous movements
- Automatic regulation of engine revolutions
- Cataphoresis treatment with powder coating
- Aerial part centering light on the basket

SAFETY DATA

- **Socage Security System**
- Unintentional maneuver protection bar
- Controls protection of the basket
- Circuit braker with differential protection on the 230V line
- Safety bypass for operator rescue
- Moment limiting device with double security
- Self levelling system for the basket
- Inclinometer
- Flanged block valves
- Emergency button
- Emergency manual hand pump
- Possibility emergency remote rescue
- Automatic PTO deactivation
- Smart anti crash cab protection
- Digital hour-counter
- Cab light closed outriggers
- Maintenance light (Service)

