SPECIFICATION



MIDI EXCAVATOR | 85Z-2/86C-2/90Z-2/100C-2

Operating weight: 8,350/9,700kg Net engine power: 45.5kW/52.4kW Dig depth: 3,615/5,090mm

JCB

A BETTER PLACE TO WORK

We've always believed that having a comfortable, easy to use working environment makes for a more productive operator. That's why our new 8-10 tonne, dash 2 midi excavator cabs have been upgraded to provide easy to see information and easy to use controls, making them great places to work.

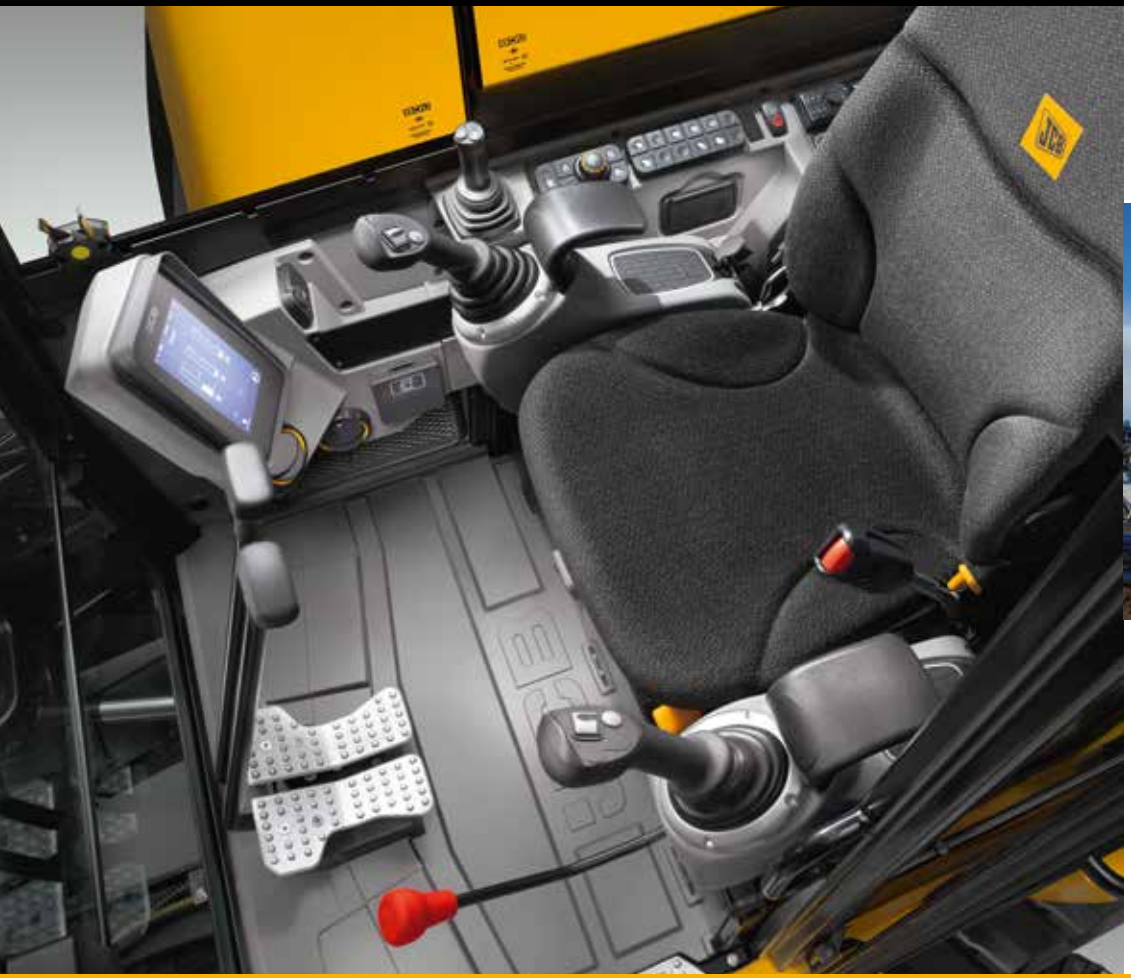





GREATER QUALITY

Heavy-duty kingpost with re-bushable pivots optimises service life and provides a safe route for dig-end hoses. Market leading components give optimum performance.

SAFETY AND SERVICEABILITY

Reversing cameras, follow-me- home lights, lift overload system and JCB's unique 2GO system, all contribute to safer working.





POWERFUL PERFORMANCE

With a high-performance Stage V engine and hydraulic pump, the 8-10T range is built to handle the toughest tasks in any environment.'

LOW COST OF OWNERSHIP

Machine functions are checked and displayed on screen before starting work, while an easy-to-clean sloping undercarriage provides a rapid turnaround.

STATIC DIMENSIONS

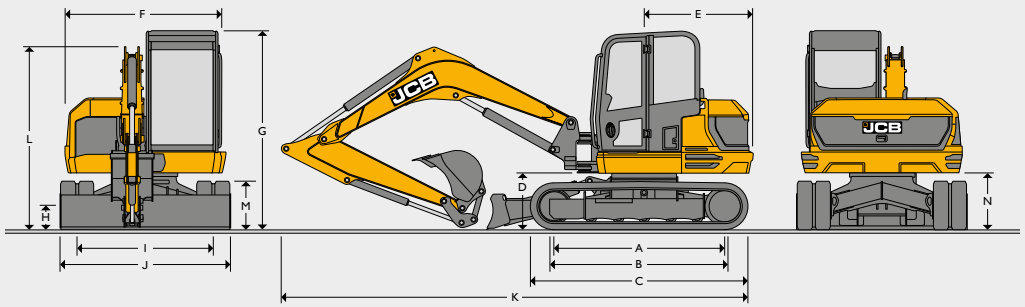

Machine model			85Z-2	86C-2	86C-2 TAB	90Z-2	100C-2
A	Sprocket idler centres	mm			2325		
B	Track length on ground	mm			2325		
C	Undercarriage overall length – rubber	mm			2950		
	Undercarriage overall length – steel				2900		
D	Kingpost clearance	mm			793		
E	Tailswing radius	mm	1145	1490	1600	1145	1601
F	Overall width of superstructure	mm	2168	2187		2187	
G	Height over cab	mm			2706		
H	Ground clearance	mm			350		
I	Track gauge	mm			1850		
J	Width over tracks (450 shoes)	mm			2300		
K	Transport length with standard dipper	mm	5833	6435	6655	6585	6860
L	Transport height with standard dipper	mm			2706		
M	Track height	mm			650		
N	Counterweight clearance	mm			762		

ENGINE

Machine model		85Z-2	86C-2	86C-2 TAB	90Z-2	100C-2
Model				Stage V KDI 2504 TCR		
Fuel				Diesel		
Cooling				Water cooled		
Gross power ISO 14396	kW (hp) @ 2200 rpm		48		55	
Net power	kW (hp) @ 2200 rpm		45.4		52.4	
Gross torque ISO 14396	Nm @ 1500 rpm			305		
Displacement	cc / litres			2500		
Gradeability	degrees			30		
Starter motor	kW (hp)			3.2		
Battery	volt / Ah			12V, 750		
Alternator	volt / amps			12V, 100		

UNDERCARRIAGE

Machine model		85Z-2	86C-2	86C-2 TAB	90Z-2	100C-2
No of top rollers				1		
No of bottom rollers				5		
Track width	mm			450		
Track width optional	mm			600		
Ground clearance	mm			350		
Track tensioning				Grease		
Travel speed – low	kph			2.5		2.4
Travel speed – high	kph		5		4.6	4.4
Tractive effort	kN	61		65	58	59.8

HYDRAULIC SYSTEM

Machine model		85Z-2	86C-2	86C-2 TAB	90Z-2	100C-2
Nominal output @ 2000	lpm		148		148	
Excavator/track main relief pressure	bar			300		
Slew main relief pressure	lpm			226		
Auxiliary low flow	lpm			40		
Auxiliary high flow	lpm			100		
Auxiliary low flow	bar			190		
Auxiliary high flow	bar			190		

WEIGHTS

Machine model		85Z-2	86C-2	86C-2 TAB	90Z-2	100C-2
Operating weight* (450mm rubber tracks)	kg	8350	8700	9250	8850	9700
Shipping** weight (450mm rubber tracks)	kg	8100	8450	9000	8600	9450
With FOGS guard roof – Stage 1	kg			+14		
With FOGs guard roof – Stage 1 HVAC	kg			+49		
With FOGS guard front – Stage 2	kg		+38		+97	
With FOGS guard roof – Stage 2	kg		+60			
With steel tracks (450mm)	kg		+195		+184	
With Bridgestone geogrips	kg			+134		
With wide dozer (2470mm)	kg			+18		
With 4-way dozer	kg		+205		+217	
Mechanical Quickhitch	kg			+95		
Hydraulic Quickhitch	kg		+67			
With Long Dipper (2250mm)	kg			+16		
With short dipper (1650mm)	kg			–48		
Ground bearing pressure (450mm rubber tracks)	kg/cm²	0.40	0.41	0.45	0.41	0.46
Ground bearing pressure (450mm steel tracks)	kg/cm²	0.40	0.42	0.46	0.42	0.47

*Operating weight to ISO 6016 including Cab, Rubber Tracks, Standard dipper, 900mm bucket, full tanks, and a 75kg operator.

**Shipping weight to ISO 6016 is mass of the base machine without an operator, with fuel level at 10% of tank capacity.

WORKING RANGE

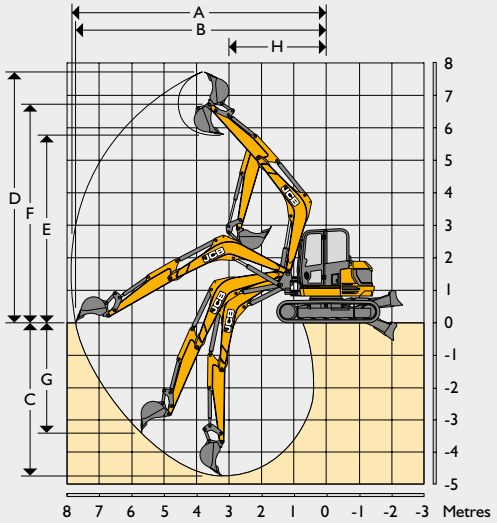

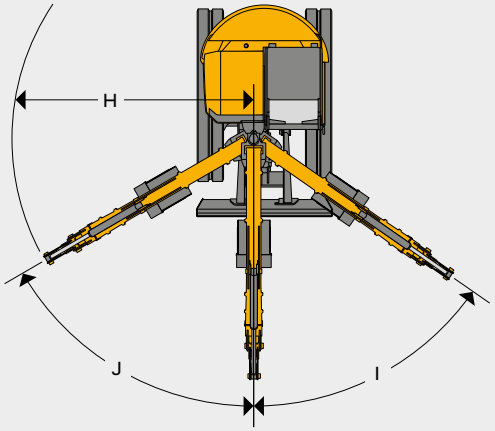

			85Z-2	86C-2	86C-2 TAB	90Z-2	100C-2
	Boom length	mm	2900	3360	Boom in = 2828 Boom out = 3917	3360	3682
	Dipper length	mm			1650 / 2100 / 2250		
A	Max digging reach	mm	6596 / 7029	6815 / 7244 / 7387	7246 / 7844 / 7989	6940 / 7542 / 7495	7065 / 7475 / 7560
B	Max digging reach on ground	mm	6401 / 6848	6635 / 7075 / 7225	7409 / 7691 / 7840	6807 / 7269 / 7389	6888 / 7315 / 7438
C	Max digging depth – dozer up	mm	3234 / 3684	3931 / 4381 / 4531	4022 / 4472 / 4622	3931 / 4381 / 4531	4221 / 4670 / 4820
	Max digging depth – dozer down	mm	3615 / 3715	3922 / 4372 / 4522	4013 / 4463 / 4613	4218 / 4668 / 4818	4491 / 4940 / 5090
D	Max digging height	mm	6487 / 6836	6848 / 7181 / 7293	7776 / 8180 / 8315	6853 / 7181 / 7297	7018 / 7321 / 7478
E	Max dump / load-over height	mm	4674 / 5023	5061 / 5395 / 5506	5900 / 6304 / 6439	4970 / 5320 / 5419	5186 / 5490 / 5660
F	Max height to dipper nose pivot pin	mm	5547 / 5896	5914 / 6248 / 6359	6832 / 7236 / 7371	5914 / 6248 / 6357	6128 / 6435 / 6537
G	Max vertical wallcut depth	mm	2525 / 2941	2736 / 3151 / 3289	3366 / 3782 / 3920	3239 / 2890 / 3821	1877 / 2257 / 3507
H	Min. front swing radius (no offset)	mm	2847 / 3047	2554 / 2679 / 2721	2223 / 2272 / 2288	2958 / 3102 / 3156	2705 / 2863 / 2906
	Min. front swing radius (fully offset)	mm	2478 / 2660	2310 / 2427 / 2466	1919 / 1963 / 1978	2364 / 2508 / 2562	2162 / 2360 / 2408
I	Boom swing left	degrees			55		
J	Boom swing right	degrees			60		
	Bucket rotation	degrees			188		
	Dipper rotation	degrees	114	122	126	114	122
	Bucket tearout	kN		57.1		57.1	72.2
	Dipper tearout	kN			49.9 / 42.3 / 40.3		
	Slew speed	rpm		10		7.9	8.2

DOZER

Machine model		85Z-2	86C-2	86C-2 TAB	90Z-2	100C-2
Dozer length	mm			1497		
Max height above ground	mm			471		
Dig depth below ground	mm			461		
Approach angle	degrees			27.8		
Width	mm			2320		
Height	mm			473		
Reach in front of tracks	mm			615		

OPERATOR STATION

Machine model		85Z-2	86C-2	86C-2 TAB	90Z-2	100C-2
Cab/canopy height	mm			1554		
Cab/canopy height with FOGS guard LEVEL 1	mm			1643		
Cab/canopy height with FOGS guard LEVEL 2	mm			1730		
Cab/canopy length	mm			1942		
Cab/canopy width	mm			1040		
Distance from seat base to roof	mm			1120		
Door aperture width	mm			612		

SERVICE CAPACITIES

Machine model		85Z-2	86C-2	86C-2 TAB	90Z-2	100C-2
Fuel tank	l			112		
Engine coolant	l		11		12.1	
Engine oil	l			11.2		
Hydraulic system	l			118		
Hydraulic tank	l			66		

NOISE/VIBRATION (85Z-2, 86C-2)

			Uncertainty	Measurement Conditions
Noise at the operator station (Lpa)	76 dB	(KpA)	0 dB	ISO 6396: 2008
Noise emission from the machine (Lwa)	95 dB	(KwA)	3dB	ISO 6395: 1988
Hand Arm Vibration (m/s²)				
Tracking duty	≤ 2.5	(K)		EN ISO 5349-2: 2001*
Low idle and excavating duty	≤ 2.5	(K)		EN ISO 5349-2: 2001*
Whole body vibration (m/s²)	0.3	(K)		ISO 2631-1: 1997*

*Based upon a test cycle defined in SAE J 1166

NOISE/VIBRATION (90Z-2, 100C-2)

			Uncertainty	Measurement Conditions
Noise at the operator station (LpA)	78 dB	(KpA)	0 dB	ISO 6396: 2008
Noise emission from the machine (LwA)	97 dB	(KwA)	1 dB	ISO 6395: 1988
Hand arm vibration (m/s²)				
Tracking duty	≤ 2.5	(K)		EN ISO 5349-2: 2001*
Low idle	≤ 2.5	(K)		EN ISO 5349-2: 2001*
Whole body vibration (m/s²)	0.4	(K)		ISO 2631-1: 1997*

*Based upon a test cycle defined in SAE J 1166

EQUIPMENT

SERVICE AND MAINTENANCE	
500 hours dig end greasing intervals	•
Greasegun & cartridge	+
Toolkit	+
Block heater 110/240V	+
2 speed auto-kickdown motors	•
Colour coded hydraulic hoses	•
Auto warm	•
Electric refuelling pump	+
CESAR datatag (UK only)	•

TRACKS AND UNDERCARRIAGE	
450mm steel tracks	+
450mm Geo Grip Road Liner tracks	+
4-way angled dozer blade	+
Dozer float	+
450mm short pitch rubber tracks	+

OPERATOR STATION	
Air-conditioning	+
Adjustable sunblind	•
High back seat or deluxe heated high back air suspension seat	+
Radio installation with media socket	+
Media socket	+
Tilting cab	•
Intermittent wiper with wash/wipe	•
Roof mounted front and rear worklights	•
3 speed heater/demister with 9 adjustable air vents	•
Colour LCD display	•
Digital clock	•
Internal lockable toolbox	•
Interior light	•
Cup holder	•
Coat hooks	•
12V accessory socket	•
Full audio/visual warning systems	•
Radio ready kit	•
Auto idle throttle	•
Below idle system	•
Four digging powerbands	•
Electronic single/double acting auxiliary changeover valve	•

OPERATOR STATION (CONTINUED)	
Midback suspension seat	•
2 piece removable floormat	•
10 different attachment flow settings	•
One touch idle	•

HYDRAULICS	
Low flow, double acting auxiliary	+
High flow double acting auxiliary	•
Electronic single/double acting auxiliary changeover valve	•
Dual pattern controls (ISO/SAE change-over)	+
ISO servo controls with electro-hydraulic dozer lever	•
Hydraulic slew braking with disc type park brake	•
ORFS hydraulics	•
Tool Select	•
Auto vent	•

PROTECTION AND SAFETY	
FOGS guard stage 1 or 2	+
Fan & chaff guards	+
Battery isolator*	•
Beacon kits	+
LED worklights (with follow me home function)	•
Travel alarm	+
JCB Immobiliser (unique key or keypad system)	+
Rearview camera	+
Rearview angled mirror	+
Dipper/crowd Ram guards	+
Neutral start	•
Full control isolation	•
2GO hydraulic isolation	•
Livelink	•
Health check system	•
Rear wiper	•
Protected front glass	+
Rear right hand side mirror	•
Hose burst check valve (boom and dipper)	•
Hose burst check valve (dozer)	+

EXTERNAL EQUIPMENT	
Advanced lift overload system	+
Mechanical quickhitch	+
Hydraulic quickhitch	+
Hydraulic quickhitch ready pipework	+
General purpose digging buckets	+
Ditch/grading buckets	+
Hydraulic breakers	+
Front exterior cab mounted mirrors	•
Thumb ready dipper	+
Special paint options	+
Twin pair of front roof mounted worklights	+
Short & long dipper options	+
Beacon ready kit	•
2 position speed & power bucket tipping link	•
Bushed kingpost	•
Protected boom worklight	•
100% steel bodywork	•

STANDARD • **OPTIONAL** +

* Region specific

LIFT CAPACITIES – 450MM RUBBER TRACKS, 2900MM BOOM, 1650MM DIPPER, NO BUCKET — 85Z

Load Point	2.0m			3.0m			4.0			5.0m			Capacity at maximum reach			
Height	Dozer Up	Dozer Down	Over Side	Dozer Up	Dozer Down	Over Side	Dozer Up	Dozer Down	Over Side	Dozer Up	Dozer Down	Over Side	Dozer Up	Dozer Down	Over Side	Distance
m	kg	kg	kg	kg	kg	kg	kg	kg	kg	kg	kg	kg	kg	kg	kg	m
4.0							1551*	1551*	1316				1277	1726*	965	4.8
3.0				2107*	2107*	2016	1728	1835*	1288	1211	1709*	915	1078	1709*	815	5.4
2.0							1667	2259*	1232	1188	1853*	894	999	1729*	754	5.6
1.0							1606	2663*	1176	1161	2012*	868	987	1774*	742	5.6
0.0				2467	4383*	1705	1571	2820*	1143	1143	2053*	851	1030	1809*	771	5.4
-1.0	3511*	3511*	3406	2473	3922*	1711	1566	2629*	1138				1173	1819*	873	4.9
-2.0				2517	2835*	1749	1601	1738*	1171				1601	1738*	1171	4.0

LIFT CAPACITY – 450MM RUBBER TRACKS, 2900MM BOOM, 2100MM DIPPER, NO BUCKET — 85Z

Load Point	2.0m			3.0m			4.0			5.0m			Capacity at maximum reach			
Height	Dozer Up	Dozer Down	Over Side	Dozer Up	Dozer Down	Over Side	Dozer Up	Dozer Down	Over Side	Dozer Up	Dozer Down	Over Side	Dozer Up	Dozer Down	Over Side	Distance
m	kg	kg	kg	kg	kg	kg	kg	kg	kg	kg	kg	kg	kg	kg	kg	m
5.0							1329*	1329*	1321				1438	1539	1080	4.5
4.0							1268*	1268*	1268*	1222	1434*	924	1082	1502*	817	5.4
3.0							1561*	1561*	1561*	1544*	1544*	1025	927	1873*	784	5.8
2.0				2281*	2281*	2281*	2046*	2046*	1437	1190	1823*	1004	855	1915*	719	6
1.0				2378	4019*	1974	1565	2638*	1319	1077	2027*	932	814	1954*	698	6
0.0				2393	4448*	1863	1548	2903*	1191	1152	2172*	856	862	2005*	687	5.8
-1.0	3310*	3310*	3286	2163	4081*	1663	1452	2900*	1075	984	2071*	791	968	2070*	731	5.4
-2.0	4847	6151*	3352	2444	3411*	1680	1542	2254*	1112				1242	1614*	913	4.7

LIFT CAPACITY – 450MM RUBBER TRACKS, 2900MM BOOM, 2250MM DIPPER, NO BUCKET — 85Z

Load Point	2.0m			3.0m			4.0			5.0m			Capacity at maximum reach			
Height	Dozer Up	Dozer Down	Over Side	Dozer Up	Dozer Down	Over Side	Dozer Up	Dozer Down	Over Side	Dozer Up	Dozer Down	Over Side	Dozer Up	Dozer Down	Over Side	Distance
m	kg	kg	kg	kg	kg	kg	kg	kg	kg	kg	kg	kg	kg	kg	kg	m
5.0							1235*	1235*	1235*				1360	1483*	1027	4.7
4.0										1245	1371*	945	1056	1453*	800	5.5
3.0							1370*	1370*	1323	1231	1439*	932	925	1459*	699	5.9
2.0							1694	1884*	1253	1196	1630*	899	879	1492*	662	6.1
1.0							1607	2381*	1172	1156	1851*	860	844	1524*	632	6.2
0.0				2414	4302*	1652	1545	2701*	1115	1123	2000*	829	874	1571*	652	6
-1.0	2710*	2710*	3213	2390	4198*	1631	1520	2727*	1092	1110	1972*	817	980	1668*	727	5.5
-2.0	4611*	4611*	3283	2416	3550*	1655	1532	2357*	1102				1192	1666*	877	4.8

Lift capacity front and rear.

Lift capacity full circle.

Notes:

1. Lifting capacities are based on ISO 10567, that is: 75% of minimum tipping load or 87% of hydraulic lift capacity, whichever is the less. Lifting capacities marked* are based on hydraulic capacity.
2. Lift capacities assume that the machine is on firm level ground and equipped with an approved lifting point.
3. A bucket must be fitted when lifting, the weight of this bucket must be deducted from the above lift capacities.
4. Lift capacities may be limited by local regulations. Please refer to your dealer.

LIFT CAPACITIES – 450MM RUBBER TRACKS, 3360MM BOOM, 1650MM DIPPER, NO BUCKET — 86C

Load Point	2.0m			3.0m			4.0			5.0m			Capacity at maximum reach			
Height	Dozer Up	Dozer Down	Over Side	Dozer Up	Dozer Down	Over Side	Dozer Up	Dozer Down	Over Side	Dozer Up	Dozer Down	Over Side	Dozer Up	Dozer Down	Over Side	Distance
m	kg	kg	kg	kg	kg	kg	kg	kg	kg	kg	kg	kg	kg	kg	kg	m
5.0							1555*	1555*	1555*				1571 *	1571 *	1571 *	4.1
4.0							1543*	1543*	1543*	1542	1555*	1287	1493	1567 *	1133	5.1
3.0				2268*	2268*	2268*	1808*	1808*	1762	1529	1614*	1274	1284	1576 *	976	5.6
2.0							2082	2209*	1690	1499	1776*	1243	1206	1606 *	916	5.8
1.0							2018	2547*	1627	1468	1932*	1211	1192	1653 *	903	5.8
0.0				3109	3612*	2371	1982	2673*	1592	1447	1994*	1190	1241	1707 *	936	5.6
-1.0	3360*	3360*	3360*	3118	3641*	2379	1976	2555*	1586	1445	1864*	1188	1373	1727 *	724	5.2
-2.0	4503*	4503*	4350	2974*	2974*	2414	1999	2091*	1608				1748	1756 *	1294	4.4

LIFT CAPACITY – 450MM RUBBER TRACKS, 3360MM BOOM, 2100MM DIPPER, NO BUCKET — 86C

Load Point	2.0m			3.0m			4.0			5.0m			Capacity at maximum reach			
Height	Dozer Up	Dozer Down	Over Side	Dozer Up	Dozer Down	Over Side	Dozer Up	Dozer Down	Over Side	Dozer Up	Dozer Down	Over Side	Dozer Up	Dozer Down	Over Side	Distance
m	kg	kg	kg	kg	kg	kg	kg	kg	kg	kg	kg	kg	kg	kg	kg	m
5.0													1399*	1399*	1195	4.9
4.0										1325*	1325*	1292	1273	1381*	972	5.6
3.0							1512*	1512*	1512*	1414*	1414*	1414*	1395*	1395*	961	6
2.0				2709*	2709*	2709*	1937*	1937*	1937*	1596*	1596*	1264	1128	1464*	888	6.2
1.0				3579*	3579*	2434	2352	2352*	1670	1793*	1793*	1215	1094	1508*	875	6.2
0.0				3002	3760*	2320	1887	2587*	1610	1433	1955*	1178	1089	1498*	911	6
-1.0	2861*	2861*	2861*	3353*	3353*	2309	1853	2542*	1559	1368	1959*	1157	1150	1550*	998	5.7
-2.0	4945*	4945*	4223	3062	3316*	2339	1934	2311*	1552	1416	1600*	1165	1416	1600*	1165	5
-3.0	3561*	3561*	3561*	2291*	2291*	2291*							1511*	1511*	1511*	3.9

LIFT CAPACITY – 450MM RUBBER TRACKS, 3360MM BOOM, 2250MM DIPPER, NO BUCKET — 86C

Load Point	2.0m			3.0m			4.0			5.0m			Capacity at maximum reach			
Height	Dozer Up	Dozer Down	Over Side	Dozer Up	Dozer Down	Over Side	Dozer Up	Dozer Down	Over Side	Dozer Up	Dozer Down	Over Side	Dozer Up	Dozer Down	Over Side	Distance
m	kg	kg	kg	kg	kg	kg	kg	kg	kg	kg	kg	kg	kg	kg	kg	m
5.0										1314*	1314*	1291	1339*	1339*	1248	5.1
4.0										1258*	1258*	1298	1221	1333*	1020	5.8
3.0							1453*	1453*	1453*	1371*	1371*	1274	1093	1347*	912	6.2
2.0				2638*	2638*	2586	1880*	1880*	1699	1494	1568*	1234	1031	1376*	779	6.4
1.0				3149	3599*	2401	2010	2305*	1615	1451	1775*	1191	1018	1417*	768	6.4
0.0				3062	3654*	2320	1953	2563*	1558	1419	1915*	1158	1078	1507*	890	6.1
-1.0	2727*	2727*	2727*	3044	3846*	2303	1929	2595*	1535	1404	1924*	1143	1150	1535*	947	5.8
-2.0	4588*	4588*	4191	3065	3414*	2323	1935	2366*	1540	1413	1688*	1152	1343	1546*	1099	5.2
-3.0	3993*	3993*	3993*	2497*	2497*	2381	1639*	1639*	1587				1547*	1547*	1538	4.1

Lift capacity front and rear.

Lift capacity full circle.

Notes:

1. Lifting capacities are based on ISO 10567, that is: 75% of minimum tipping load or 87% of hydraulic lift capacity, whichever is the less. Lifting capacities marked* are based on hydraulic capacity.
2. Lift capacities assume that the machine is on firm level ground and equipped with an approved lifting point.
3. A bucket must be fitted when lifting, the weight of this bucket must be deducted from the above lift capacities.
4. Lift capacities may be limited by local regulations. Please refer to your dealer.

LIFT CAPACITIES – 450MM RUBBER TRACKS, 3360MM BOOM, 1650MM DIPPER, NO BUCKET — 86C TAB

Load Point	3.0m			4.0m			5.0			6.0m			Capacity at maximum reach			
Height	Dozer Up	Dozer Down	Over Side	Dozer Up	Dozer Down	Over Side	Dozer Up	Dozer Down	Over Side	Dozer Up	Dozer Down	Over Side	Dozer Up	Dozer Down	Over Side	Distance
m	kg	kg	kg	kg	kg	kg	kg	kg	kg	kg	kg	kg	kg	kg	kg	m
6.0				1752*	1752*	1584							1752*	1752*	1584	4
5.0				1618*	1618*	1624	1421	1559*	1193				1210	1487*	1016	5.5
4.0				1227*	1227*	1227*	1418	1558*	1190				1153	1477*	983	5.8
3.0				1360*	1360*	1360*	1380	1653*	1151	1031	1427*	860	1014	1413*	848	6.2
2.0	2283*	2283*	2251	1714*	1714*	1392	1329	1763*	1098	1008	1445*	836	948	1368*	828	6.4
1.0	2961	3218*	2052	1844	2109*	1316	1285	1816*	1052	989	1409*	817	909	1332*	789	6.4
0.0	2839	3619*	1947	1809	2196*	1285	1258	1762*	1024	984	1250*	811	897	1295*	769	6.2
-1.0	2512*	2512*	1914	1780	1922*	1284	1253	1565*	1018				1106	1154*	882	5.9
-2.0	1869*	1869*	1935	1466	1466*	1308	1096*	1096*	1040				972*	972*	995	5.2

LIFT CAPACITIES – 450MM RUBBER TRACKS, 3360MM BOOM, 2100MM DIPPER, NO BUCKET — 86C TAB

Load Point	3.0m			4.0m			5.0			6.0m			Capacity at maximum reach			
Height	Dozer Up	Dozer Down	Over Side	Dozer Up	Dozer Down	Over Side	Dozer Up	Dozer Down	Over Side	Dozer Up	Dozer Down	Over Side	Dozer Up	Dozer Down	Over Side	Distance
m	kg	kg	kg	kg	kg	kg	kg	kg	kg	kg	kg	kg	kg	kg	kg	m
6.0				1445*	1445*	1445*	1389*	1389*	1389*				1389*	1389*	1389*	5
5.0				1430*	1430*	1430*	1375*	1375*	1375*	1194*	1194*	1194*	1194*	1194*	1194*	6
4.0				1551*	1551*	1551*	1057*	1057*	1057*	1253*	1253*	1253*	1192	1306*	964	6.3
3.0				2070*	2070*	2070*	1169*	1169*	1169*	1065*	1065*	1065*	1069	1252*	861	6.7
2.0	1831*	1831*	1831*	1420*	1420*	1420*	1411*	1411*	1410	1400*	1400*	1004	1033	1234*	829	6.8
1.0	2981*	2981*	2182	2012*	2012*	1553	1502	1546*	1126	1218	1440*	972	997	1174*	797	6.9
0.0	3374	3656*	2042	2151	2381*	1469	1453	1719*	1081	1195	1407*	948	1030	1149*	821	6.7
-1.0	3294	3828*	1982	1981	2027*	1413	1407	1627*	1159	1188	1259*	941	1096	1052*	873	6.4
-2.0	3289	3530*	1979	1662*	1662*	1427	1327*	1327*	1168				947*	947*	1002	5.8
-3.0				1038*	1038*	1038*							642*	642*	642*	4.9

LIFT CAPACITIES – 450MM RUBBER TRACKS, 3360MM BOOM, 2250MM DIPPER, NO BUCKET — 86C TAB

Load Point	3.0m			4.0m			5.0			6.0m			Capacity at maximum reach			
Height	Dozer Up	Dozer Down	Over Side	Dozer Up	Dozer Down	Over Side	Dozer Up	Dozer Down	Over Side	Dozer Up	Dozer Down	Over Side	Dozer Up	Dozer Down	Over Side	Distance
m	kg	kg	kg	kg	kg	kg	kg	kg	kg	kg	kg	kg	kg	kg	kg	m
6.0				1420*	1420*	1420*	1443	1497*	1226				1443	1497*	1226	5
5.0				1372*	1372*	1372*	1337*	1337*	1253				1174	1478*	952	5.9
4.0				1500*	1500*	1500*	1383*	1383*	1239	1207	1348*	988	1056	1321*	862	6.5
3.0				1773*	1773*	1569	1133*	1133*	1116	1191	1392*	972	979	1364*	798	6.8
2.0				1364*	1364*	1364*	1312*	1312*	1087	1166	1460*	947	928	1253*	753	7
1.0	2715*	2715*	2176	1863*	1863*	1404	1333	1551*	1050	1141	1510*	921	918	1232*	744	7
0.0	2950	3490*	2060	1875	2272*	1362	1303	1761*	1017	1122	1500*	902	949	1297*	767	6.8
-1.0	2780*	2780*	2011	1836	2205*	1343	1290	1760*	1067	1116	1382*	896	1007	1153*	813	6.5
-2.0	2644*	2644*	2008	1830	1866*	1338	1295	1492*	1073	1008*	1008*	911	1008*	1008*	911	6
-3.0	1756*	1756*	1756*	1282*	1282*	1282*	856*	856*	856*				780*	780*	780*	5.1

Lift capacity front and rear.

Lift capacity full circle.

Notes:

1. Lifting capacities are based on ISO 10567, that is: 75% of minimum tipping load or 87% of hydraulic lift capacity, whichever is the less. Lifting capacities marked* are based on hydraulic capacity.
2. Lift capacities assume that the machine is on firm level ground and equipped with an approved lifting point.
3. A bucket must be fitted when lifting, the weight of this bucket must be deducted from the above lift capacities.
4. Lift capacities may be limited by local regulations. Please refer to your dealer.

LIFT CAPACITIES – 450MM RUBBER TRACKS, 3360MM BOOM, 1650MM DIPPER, NO BUCKET — 90Z

Load Point	2.0m			3.0m			4.0			5.0m			Capacity at maximum reach			
Height	Dozer Up	Dozer Down	Over Side	Dozer Up	Dozer Down	Over Side	Dozer Up	Dozer Down	Over Side	Dozer Up	Dozer Down	Over Side	Dozer Up	Dozer Down	Over Side	Distance
m	kg	kg	kg	kg	kg	kg	kg	kg	kg	kg	kg	kg	kg	kg	kg	m
5.0							1385*	1385*	1385*				1459*	1459*	1168	4.5
4.0							1408*	1408*	1408*	1322	1612*	996	1201	1634*	905	5.3
3.0				2233*	2233*	2101	1705*	1705*	1362	1304	1719*	979	1034	1645*	778	5.8
2.0							1764	2478*	1289	1270	1928*	946	970	1679*	727	6
1.0							1697	2889*	1226	1236	2124*	914	957	1732*	714	6
0.0				2611*	2611*	1785	1663	3020*	1195	1214	2207*	894	993	1792*	738	5.8
-1.0	2726*	2726*	2726*	2627	4150*	1796	1658	2870*	1191	1210	2091*	890	1094	1819*	810	5.4
-2.0	4172*	4172*	3202	2663	3360*	1829	1680	2364*	1211				1380	1852*	1011	4.6

LIFT CAPACITY – 450MM RUBBER TRACKS, 3360MM BOOM, 2100MM DIPPER, NO BUCKET — 90Z

Load Point	2.0m			3.0m			4.0			5.0m			Capacity at maximum reach			
Height	Dozer Up	Dozer Down	Over Side	Dozer Up	Dozer Down	Over Side	Dozer Up	Dozer Down	Over Side	Dozer Up	Dozer Down	Over Side	Dozer Up	Dozer Down	Over Side	Distance
m	kg	kg	kg	kg	kg	kg	kg	kg	kg	kg	kg	kg	kg	kg	kg	m
5.0										1234*	1424*	995	1255	1463*	943	5.2
4.0										1189*	1372*	1282*	1037	1432*	809	5.8
3.0							1540*	1559*	1594*	1438*	1475*	992	967	1429*	683	6.2
2.0				3244*	3359*	2239*	2227*	2275*	1335	1422	1784*	953	883	1509*	625	6.4
1.0				2726	3966*	1808	1841	2671*	1277	1300	1997*	901	867	1540*	602	6.5
0.0				3045*	4115*	1684	1743	3062*	1130	1260	2237*	887	914	1670*	656	6.4
-1.0	2300*	2300*	2300*	2270	3686*	1664	1603	2945*	1140	1186	2166*	878	953	1664*	697	5.9
-2.0	3991*	3991*	3089	2588	3792*	1760	1628	2595*	1160	1187	1836*	866	1114	1640*	817	5.2
-3.0	3311*	3311*	3183	2250*	2250*	1818	1458*	1458*	1208				1352*	1352*	1163	4.1

LIFT CAPACITY – 450MM RUBBER TRACKS, 3360MM BOOM, 2250MM DIPPER, NO BUCKET — 90Z

Load Point	2.0m			3.0m			4.0			5.0m			Capacity at maximum reach			
Height	Dozer Up	Dozer Down	Over Side	Dozer Up	Dozer Down	Over Side	Dozer Up	Dozer Down	Over Side	Dozer Up	Dozer Down	Over Side	Dozer Up	Dozer Down	Over Side	Distance
m	kg	kg	kg	kg	kg	kg	kg	kg	kg	kg	kg	kg	kg	kg	kg	m
5.0										1148*	1148*	1004	1204	1390*	906	5.3
4.0										1126*	1126*	1005	983	1384*	738	6
3.0							1340*	1340*	1340*	1253*	1253*	980	879	1400*	657	6.4
2.0							1779	2080*	1300	1265	1690*	940	827	1433*	615	6.6
1.0							1690	2602*	1217	1220	1942*	897	815	1479*	603	6.6
0.0				2557	3274*	1731	1632	2900*	1164	1186	2111*	865	860	1576*	634	6.3
-1.0	2184*	2184*	2184*	2548	4465*	1723	1610	2923*	1144	1170	2130*	850	915	1609*	672	6
-2.0	3701*	3701*	3059	2571	3918*	1744	1617	2656*	1150	1176	1904*	856	1064	1626*	779	5.4
-3.0	3779*	3779*	3149	2458*	2458*	1797	1643*	1643*	1189				1411*	1411*	1082	4.3

Lift capacity front and rear.

Lift capacity full circle.

Notes:

1. Lifting capacities are based on ISO 10567, that is: 75% of minimum tipping load or 87% of hydraulic lift capacity, whichever is the less. Lifting capacities marked* are based on hydraulic capacity.
2. Lift capacities assume that the machine is on firm level ground and equipped with an approved lifting point.
3. A bucket must be fitted when lifting, the weight of this bucket must be deducted from the above lift capacities.
4. Lift capacities may be limited by local regulations. Please refer to your dealer.

LIFT CAPACITY – 450MM RUBBER TRACKS, 3682MM BOOM, 1650MM DIPPER, NO BUCKET — 100C

Load Point	2.0m			3.0m			4.0			5.0m			Capacity at maximum reach			
Height	Dozer Up	Dozer Down	Over Side	Dozer Up	Dozer Down	Over Side	Dozer Up	Dozer Down	Over Side	Dozer Up	Dozer Down	Over Side	Dozer Up	Dozer Down	Over Side	Distance
m	kg	kg	kg	kg	kg	kg	kg	kg	kg	kg	kg	kg	kg	kg	kg	m
5.0							1725*	1725*	1725*				1784*	1784*	1784*	4.6
4.0							1842*	1842*	1842*	1763	1845	1614	1768*	1768*	1438	5.4
3.0				3040*	3040*	3040*	2229*	2229*	2171	1904	1993	1588	1684	1869*	1285	5.8
2.0							2729*	2729*	2084	2053	2220	1548	1586	1915*	1208	6
1.0							2751	3237*	2015	2012	2415*	1510	1533	1942*	1166	6.1
0.0				2353*	2353*	2353*	2713	3335*	1980	1986	2490	1486	1628	2051*	1232	5.8
-1.0	2766*	2766*	2766*	4199*	4199*	2961	2707	3175*	1974	1979	2378	1480	1745	2043*	1316	5.5
-2.0	5000*	5000*	5000*	3543*	3543*	2993	2598*	2598*	1992				1967*	1967*	1577	4.8
-3.0				2297*	2297*	2297*							1892*	1892*	1892*	3.5

LIFT CAPACITY – 450MM RUBBER TRACKS, 3682MM BOOM, 2100MM DIPPER, NO BUCKET — 100C

Load Point	2.0m			3.0m			4.0			5.0m			Capacity at maximum reach			
Height	Dozer Up	Dozer Down	Over Side	Dozer Up	Dozer Down	Over Side	Dozer Up	Dozer Down	Over Side	Dozer Up	Dozer Down	Over Side	Dozer Up	Dozer Down	Over Side	Distance
m	kg	kg	kg	kg	kg	kg	kg	kg	kg	kg	kg	kg	kg	kg	kg	m
5.0										1530*	1530*	1530*	1563*	1563*	1527	5.2
4.0							1542*	1542*	1542*	1539*	1539*	1539*	1568*	1568*	1259	5.9
3.0				2385*	2385*	2385*	1926*	1926*	1926*	1708*	1708*	1587	1485	1664*	1132	6.3
2.0							2454*	2454*	2090	1953*	1953*	1540	1404	1701*	1068	6.5
1.0							2743	3042*	2004	1997	2285*	1494	1388	1751*	1053	6.5
0.0				2704*	2704*	2704*	2685	3265*	1952	1961	2426*	1461	1436	1819*	1085	6.3
-1.0	2466*	2466*	2466*	4202	4622*	2897	2665	3226*	1933	1945	2410*	1445	1560	1898*	1174	5.9
-2.0	4391*	4391*	4391*	3916*	3916*	2921	2674	2920*	1941	1952	2152*	1452	1808	1938*	1352	5.3
-3.0	4539*	4539*	4539*	2963*	2963*	2963*	2086*	2086*	1982				1834*	1834*	1805	4.3

LIFT CAPACITY – 450MM RUBBER TRACKS, 3682MM BOOM, 2250MM DIPPER, NO BUCKET — 100C

Load Point	2.0m			3.0m			4.0			5.0m			Capacity at maximum reach			
Height	Dozer Up	Dozer Down	Over Side	Dozer Up	Dozer Down	Over Side	Dozer Up	Dozer Down	Over Side	Dozer Up	Dozer Down	Over Side	Dozer Up	Dozer Down	Over Side	Distance
m	kg	kg	kg	kg	kg	kg	kg	kg	kg	kg	kg	kg	kg	kg	kg	m
5.0										1443*	1443*	1443*	1510*	1510*	1438	5.4
4.0										1469*	1469*	1469*	1513*	1513*	1212	6.1
3.0				2324*	2324*	2324*	1916*	1916*	1916*	1710*	1710*	1710*	1607*	1607*	1109	6.5
2.0				3577*	3577*	3577*	2437*	2437*	2437*	1961*	1961*	1615	1364	1674*	1066	6.6
1.0				4202*	4202*	2849	2911*	2911*	2071	2217*	2217*	1533	1333	1734*	1025	6.6
0.0				4347*	4347*	2854	2687	3232*	1963	1969	2467*	1471	1385	1800*	1040	6.4
-1.0	4444*	4444*	3309	4052*	4052*	2660	2633	3261*	1853	1940	2520*	1416	1493	1883*	1112	6.1
-2.0	4118*	4118*	4118*	4027*	4027*	2904	2662	2976*	1930	1942	2206*	1442	1709	1871*	1280	5.5
-3.0	4966*	4966*	4966*	3149*	3149*	2956	2229*	2229*	1965				1832*	1832*	1674	4.5

Lift capacity front and rear.

Lift capacity full circle.

Notes:

1. Lifting capacities are based on ISO 10567, that is: 75% of minimum tipping load or 87% of hydraulic lift capacity, whichever is the less. Lifting capacities marked* are based on hydraulic capacity.
2. Lift capacities assume that the machine is on firm level ground and equipped with an approved lifting point.
3. A bucket must be fitted when lifting, the weight of this bucket must be deducted from the above lift capacities.
4. Lift capacities may be limited by local regulations. Please refer to your dealer.





ONE COMPANY, OVER 300 MACHINES.

Your nearest JCB dealer

32806 en-GB 06/25 Issue 3

Midi Excavator 85Z-2/86C-2/90Z-2/100C-2

Operating weight: 8,350/9,700kg Net engine power: 45.5kW/52.4kW Dig depth: 3,615/5,090mm

JCB Sales Limited, Rocester, Staffordshire, United Kingdom ST14 5JP.
Tel:+44 (0)1889 590312 Email: salesinfo@jcb.com

Download the very latest information on this product range at: www.jcb.com

©2025 JCB Sales. All rights reserved. No part of this publication may be reproduced, stored in a retrieval system, or transmitted in any form or by any other means, electronic, mechanical, photocopying or otherwise, without prior permission from JCB Sales. All references in this publication to operating weights, sizes, capacities and other performance measurements are provided for guidance only and may vary dependant upon the exact specification of machine. They should not therefore be relied upon in relation to suitability for a particular application. Guidance and advice should always be sought from your JCB Dealer. JCB reserves the right to change specifications without notice. Illustrations and specifications shown may include optional equipment and accessories. The JCB logo is a registered trademark of J C Bamford Excavators Ltd.